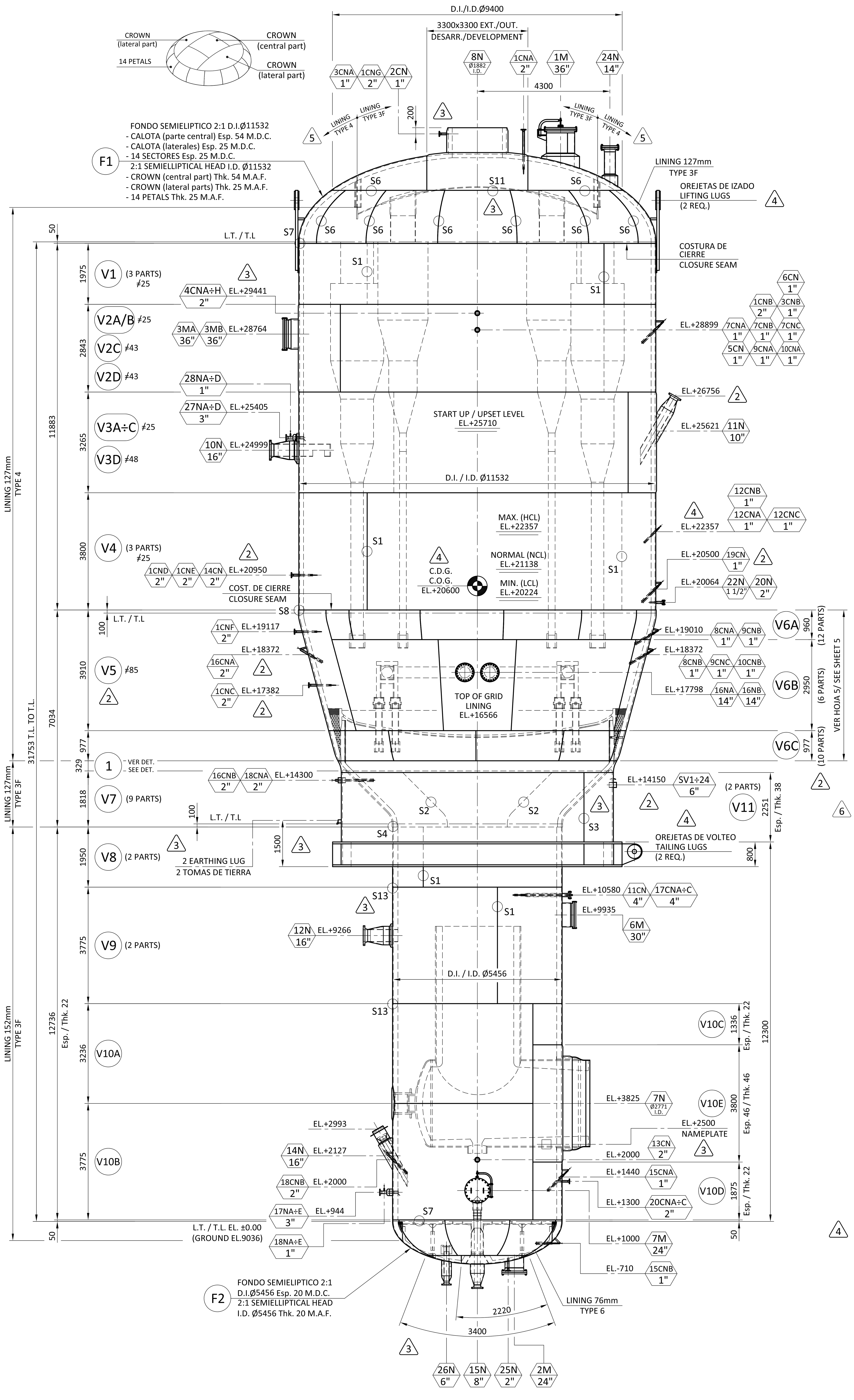

ALZADO
ELEVATION

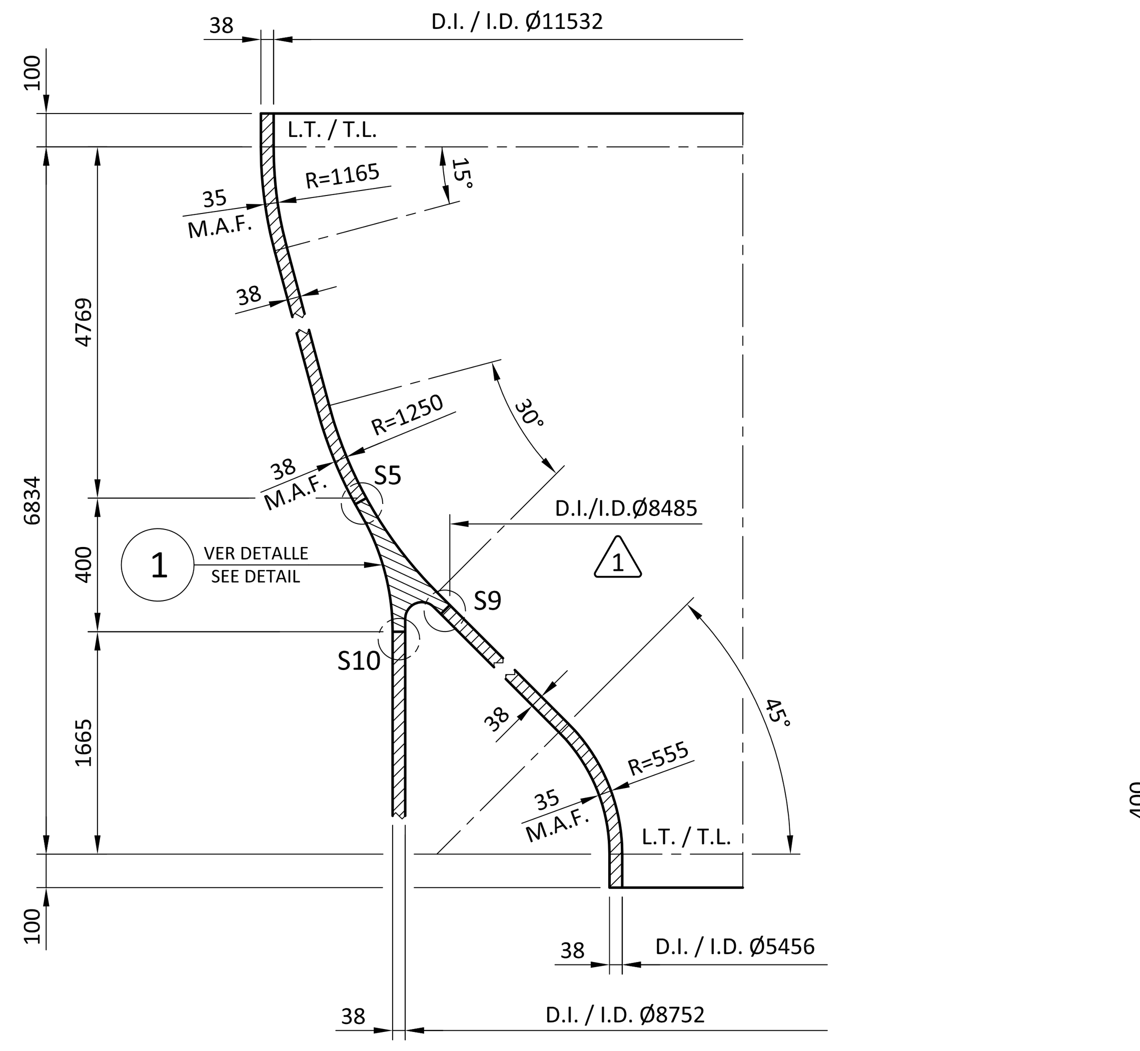

DETALLE SECCION CONICA
CONICAL SECTION DETAIL

FOUNDATION LOADS CARGAS EN FUNDACIONES		EMPTY	OPERATION NORMAL	OPERATION START-UP/UPSET	TEST
WEIGHT (Kg)		1.085.000	1.540.000	2.025.000	3.285.000
WIND	SHEAR (Kg)	79.500	144.000	143.600	5.500
WIND	B. MOMENT (Kg x m)	699.000	859.000	859.000	262.000
SEISMIC	SHEAR (Kg)	528.000	815.000	N/A	N/A
SEISMIC	B. MOMENT (Kg x m)	5.034.000	6.139.000	N/A	N/A

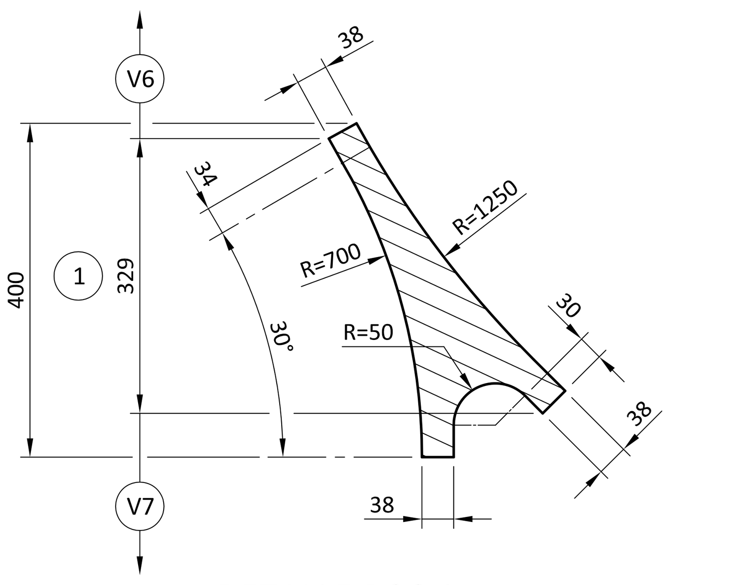

DETALLE POS.1
ITEM 1 DETAIL

CODIGO	ASME SECT. VIII DIV. 1 Ed. 2013	CODE
SELLO U ~~/ U2 / S~~	SI / YES	STAMP U ~~/ U2 / S~~
REG. "NATIONAL BOARD"	NO	NATIONAL BOARD REGISTRATION
ESPECIFICACIONES	020700342 / I213	SPECIFICATIONS
INSPECCION	SEE ITP 2/982-200 (V-020700342-I213-FCK-R-102-0016-A)	INSPECTION
MARCADO CE (MODULO)	NO	CE MARKING (MODULE)

DATOS DE DISEÑO		DESIGN DATA
PRESION DE DISEÑO	4.8 Kg/cm2 (g) (VER TABLA 1 / SEE TABLE 1)	DESIGN PRESSURE
TEMPERATURA DE DISEÑO	343 °C (METAL) (VER TABLA 1 / SEE TABLE 1)	DESIGN TEMPERATURE
PRESION DE TRABAJO	--	OPERATING PRESSURE
TEMPERATURA DE TRABAJO	--	OPERATING TEMPERATURE
PRESION PRUEBA HIDROSTATICA	(1) SHOP TEST: 7.9 Kg/cm2 (7.7 bar) FIELD NEW TEST: 7.9 Kg/cm2 (7.7 bar) FIELD FUTURE TEST: 7.3 Kg/cm2 (7.1 bar)	HYDROSTATIC TEST PRESSURE
MARGEN CORROSION	VER TABLA 2 / SEE TABLE 2	CORROSION ALLOWANCE
SERPENTIN / CAMISA	--	COIL / JACKET
DENSIDAD DEL LIQUIDO		LIQUID DENSITY
SERVICIO ~~ACIDO / LETAL~~	N/A	~~ACID / LETHAL~~ SERVICE
TIPO DE FONDOS	SEMIELLIPTICAL 2:1	TYPE OF HEADS
RADIOGRAFIADO	RT-1	RADIOGRAPHY
OTROS E.N.D.	(1) VER NOTE 6 / SEE NOTE 6	OTHER N.D.T.
TRATAMIENTO TERMICO	SI / YES (VER HOJA 2 / SEE SHEET 2)	STRESS RELIEVING
COEFICIENTE SOLDADURA	1 (SHELL / HEADS)	JOINT EFFICIENCY
AISLAMIENTO	(1) N/A	INSULATION
PROTECCION CONTRA FUEGO	50 (INSIDE) / 50 (OUTSIDE)	FIREPROOFING
PRESION DE VIENTO	CODE: E.020	WIND PRESSURE
FACTOR DE TERREMOTO	(2) ASCE 7 - Ed.2010	EARTHQUAKE FACTOR
TEMP. MIN. DE DISEÑO	12.8 °C	MIN.DESIGN METAL TEMP.
ENSAYO DE IMPACTO	(1) VER HOJA 2 / SEE SHEET 2	IMPACT TEST
M.A.W.P.	(1) 5.35 Kg/cm2 (SHELL V1-V4)	M.A.W.P.

ESPECIFICACION MATERIALES			MATERIALS SPECIFICATION	
CUERPO		(1) SA-516 Gr.70N	SHELL	
FONDOS		(1) SA-516 Gr.70N	HEADS	
SOPORTES (~~Cunas~~, faldon, ~~patas, silletas, otros~~).		(2) SA-516 Gr.70N / S-355 JR	SUPPORTS (~~Saddles~~, skirt, ~~legs, brackets, others~~).	
UNION FALDON - ENVOLVENTE		SA-266 Gr.2 (ANILLO FORJADO / FORGED RING)	SKIRT TO SHELL JUNCTION	
PERNOS Y TUERCAS DE ANCLAJE		--	ANCHOR BOLTS & NUTS	
ANILLOS RIGIDIZADORES		N/A	STIFFENING RINGS	
CHAPAS REFUERZO		SA-516 Gr.70	REINFORCING PADS	
CLIPS EXTERNOS		SA-516 Gr.70	EXTERNAL CLIPS	
INSERT PLATES		(1) SA-516 Gr.70N	INSERT PLATES	
TUBULADURAS	BRIDAS / FORJAS	SA-105 / SA-266 Gr.2 / SA-182 F304H	FLANGES / FORGINGS	NOZZLES
TUBULADURAS	TUBOS CHAPA	SA-516 Gr.70 / SA-240 Tp. 304H	NECK PLATES	NOZZLES
TUBULADURAS	TUBOS	SA-106 Gr.B / SA-312-304H	NECK PIPES	NOZZLES
TUBULADURAS	ACCESORIOS	SA-234 WPB / SA-234 WP5 / SA-403-304H / SA-234 WP11	FITTINGS	NOZZLES
SERPENTIN / CAMISA		--	COIL / JACKET	
TORNILLOS / TUERCAS PRESION		SA-193 Gr.B7 / SA-194 Gr.2H	PRESSURE BOLTS / NUTS	
JUNTAS		4.5 Thk. SPIRAL WOUND GRAPHITE FILLER WITH S.S. 316 WINDING, CS SOLID CENTER RING AND SS 316 INNER RING	GASKETS	
OREJETAS DE IZADO / VOLTEO		SA-516 Gr.70	LIFTING / TAILING LUGS	
TOMA DE TIERRA / PLACA CARACT.		AISI 304	EARTH LUG / NAMEPLATE	
ELEMENTOS INTERNOS		CYCLONES & PLENUM: SS 304H	INTERNAL ELEMENTS	
ELEMENTOS INTERNOS		DENSE BED GRID & GRID SKIRT: SS 304H	INTERNAL ELEMENTS	
ELEMENTOS INTERNOS		DENSE BED GRID VAPOR CAPS: SS 304H	INTERNAL ELEMENTS	
ELEMENTOS INTERNOS		QUENCH GRID & GRID SKIRT: SA-204 Gr.B	INTERNAL ELEMENTS	
ELEMENTOS INTERNOS		AIR DISTRIBUTOR: SS 304H	INTERNAL ELEMENTS	
ELEMENTOS INTERNOS		QUENCH COKE TEE: SS 304H	INTERNAL ELEMENTS	
ELEMENTOS INTERNOS		REST OF INTERNALS: SEE DETAIL DWG´S	INTERNAL ELEMENTS	

PESO Y CAPACIDAD (APROX.)		WEIGHT AND CAPACITY (EST.)
PESO FABRICADO	485000 Kg	FABRICATED WEIGHT
PESO REFRACTARIO (INSTALADO EN TALLER)	(4) 71500 Kg	REFRACTORY WEIGHT (INSTALLED IN SHOP)
PESO CICLONES (C/REFRAC.)	127500 Kg	CYCLONES WEIGHT (W/REFRACT.)
PESO TRANSPORTE	VER PLANO / SEE DWG. 2/982-215	SHIPPING WEIGHT
CAPACIDAD	2275 m3	CAPACITY
PESO PRUEBA HIDRAULICA TALLER	2760000 Kg	HYDRAULIC TEST WEIGHT-SHOP
IZADO (SIN EL REFRACTARIO (INSTALADO EN CAMPO)	(4) 684000 Kg	LIFTING (WITHOUT LINING SUPPLY SITE)

PREPARACION SUPERFICIES		SURFACE PREPARATION
CHORREADO GRADO	Según doc nº / As per doc nº: V-020700342-I213-FCK-R-101-0065 (Idesa Ref: 2/982-FP-1)	SANDBLASTING GRADE
PINTURA		PAINTING
DECAPADO Y PASIVADO (INT./EXT.)	NO	PICKLING & PASSIVAT. (INT./OUT.)

	LOCATION	DESIGN PRESSURE Kg/cm2 (g) or DESIGN ΔP, Kg/cm2	DESIGN FLUID TEMPERATURE °C	METAL DESIGN TEMPERATURE °C	TIME (1)
-TABLA 1- CONDICIONES DE DISEÑO -TABLE 1- DESIGN CONDITIONS	TOP HEAD	4.8	635 (2)	343	LONG.
	UPPER STRAIGHT SIDE	4.8	635 (2)	343	LONG.
	15° CONE SECTION-ABOVE GRID	4.8	635 (2)	343	LONG.
	45° CONE SECTION-BELLOW GRID	4.8	677 (2),(3)	343	LONG.
	LOWER STRAIGHT SIDE	4.8	677 (2),(3)	343	LONG.
	BOTTOM HEAD	4.8	371	343	LONG.
	PLENUM CHAMBER, (ΔP Up)	0.28	635 (2)	635 (2)	LONG.
	DENSE BED GRID, (ΔP Up)	0.21	677 (2),(3)	677 (2),(3)	LONG.
	QUENCH SECT GRID, (ΔP Up)	0.77	371	371	LONG.
	DENSE BED GRID, (ΔP DOWN)	0.42	677	677	SHORT
	QUENCH SECT GRID, (ΔP DOWN)	0.85	427	427	SHORT

(1) LONG TERM IS NORMAL OPERATION. SHORT DURATION TIME IS 1000 HRS EXCEPT WHERE OTHERWISE NOTED IN BELOW NOTES (2) & (3).
(2) IN ADDITION TO THE LONG TERM CASE, THE FOLLOWING SHORT TERM CASES WERE ALSO CONSIDERED:
INVENTORY SHIFT (1000 HRS) AT 815 °C.
QUENCH COKE "BLOW THROUGH" (50 HRS) AT 963 °C. THIS CASE ASSUMES "HOT" GASIFIER OVERHEAD FLUID BACK FLOWING UP THE QUENCH COKE STANDPIPE.
(3) THE FOLLOWING SHORT TERM CASE WAS ALSO CONSIDERED AT THIS LOCATION:
LOSS OF QUENCH COKE, (50 HRS) AT 963 °C. THIS CASE ASSUMES THAT COKE FLOW CEASES IN THE QUENCH COKE STANDPIPE.

-TABLA 2- MARGEN DE CORROSION -TABLE 2- CORROSION ALLOWANCE	SHELL AND HEADS (INT.)		1.5 mm
	SKIRT (INT. / EXT.)		1.5 mm / 1.5 mm
	ANCHOR BOLTS		--
	CYCLONES	PRIMARY	3 mm TOTAL C.A.
	CYCLONES	SECONDARY	6 mm TOTAL C.A.
	GRIDS	QUENCH GRID	3 mm TOTAL C.A.
	GRIDS	DENSE BED GRID	11 mm TOTAL C.A.
	GRIDS	DENSE BED GRID SKIRT	1.5 mm TOTAL C.A.

-PARA DETALLES DE SOLDADURA VER: 2/982-201 (3/6)
-PARA NOTAS GENERALES VER: 2/982-201 (2/6)
-PARA DETALLES ANCLAJES DE REFRACTARIO VER: 2/982-212
-VER PLANO IDESA 2/982-201 (5/6) PARA ELEVACION ENTRADA DE HOMBRES 4 y 5 Y TUBULADURAS 1N 2N 3N 4N 5N 6N 9N 13N 19N 21N Y 23N.

-FOR WELD DETAILS SEE: V-020700342-I213-FCK-R-102-0038 (5)
-FOR GENERAL NOTES SEE: V-020700342-I213-FCK-R-102-0012 (5)
-FOR REFRACTORY SUPPORTS DETAILS SEE: V-020700342-I213-FCK-R-102-0018 (5)
-SEE DRAWING IDESA V-020700342-I213-FCK-R-102-0049 FOR THE ELEVACION OF THE MANWAYS 4 & 5 AND NOZZLES 1N 2N 3N 4N 5N 6N 9N 13N 19N 21N AND 23N. (5)

PETROPERU — Consorcio PMC Talara CPT

PROYECTO DE MODERNIZACIÓN REFINERÍA TALARA
CALIFICACIÓN DEL DOCUMENTO:

- [ ] 1. APROBADO
- [ ] 2. APROBADO CON COMENTARIOS
- [ ] 3. NO APROBADO
- [x] 4. REVISADO SIN COMENTARIOS
- [ ] 5. REVISADO CON COMENTARIOS

NOTA: LA APROBACIÓN Ó REVISIÓN DEL DOCUMENTO NO EXONERA AL CONTRATISTA DE SU RESPONSABILIDAD CON RESPECTO AL DISEÑO Y CALIDAD DE LA INGENIERÍA REALIZADA.

CPT	
NOMBRE Juan Carlos Latasa CARGO Especialista Equipos Mecánicos FIRMA	NOMBRE Ángel Rodríguez CARGO Gerente de Ingeniería FIRMA

FECHA: 14/12/2016

REV.	OBJETO DE LA REVISION / Subject of Revision	DATE	SIGNAT.	DATE	SIGNAT.	DATE	SIGNAT.
6	DONDE SE INDICA / AS INDICATED	18.11.16	Jesús C.	18.11.16	[signature]	18.11.16	[signature]
5	DONDE SE INDICA / AS INDICATED	29.09.16	JESUS C.	29.09.16	SOLE	29.09.16	BEGOÑA
4	DONDE SE INDICA / AS INDICATED	22.02.16	JAVIER	22.02.16	SOLE	22.02.16	BEGOÑA
3	DONDE SE INDICA / AS INDICATED	27.11.15	JAVIER	27.11.15	SOLE	27.11.15	BEGOÑA
2	DONDE SE INDICA / AS INDICATED	21.08.15	JAVIER	21.08.15	SOLE	21.08.15	BEGOÑA
		ISSUED (D)		REVIEWED (Pr.E.)		APPROVED (T.M.)	

CLIENTE / Client: T.R. / PETROPERU — N°. ORDEN / Job N°: 2/982
OBRA / Job: HEATER FCK-R-102
DESIGNACION / Designation: CONJUNTO GENERAL / GENERAL ASSEMBLY
PLANO N° / Drawing N°: 2/982-201 (1/6) — REV. 6 — SIZE A1 — SCALE 1:75

IDESA ingeniería y diseño europeo, s.a.

Este documento es propiedad de IDESA, y no puede ser cedido a terceros, en todo o en parte ni usado de forma diferente al proposito para el cual se presta sin aprobacion escrita de IDESA
This document is the property of IDESA, and may not be made Know, in full or in part, be copied or be multiplied or in any other way be mode use of without permission of IDESA.

TOLERANCIAS GENERALES / GENERAL TOLERANCES	≤6	>6	>30	>120	>315	>1000	>2000
MECANIZADO TIPO MEDIO/MEDIUM MACHING	±0.1	±0.2	±0.3	±0.5	±0.8	±1.2	±2
ELEMENTO SOLDADO/WELDED STRUCTURE	±0.5	±1	±2	±3	±5	±7	±10

PROYECCION/PROJECTION